Page 343 in *California Master Gardener Handbook*. Nancy Garrison and Dennis R. Pittenger. 2002. Pittenger, editor. University of California, Division of Agriculture and Natural Resources, Publication 3338. Oakland, CA.
Copyright © 2009 - The Regents of the University of California. All rights reserved.

Figure 14.2
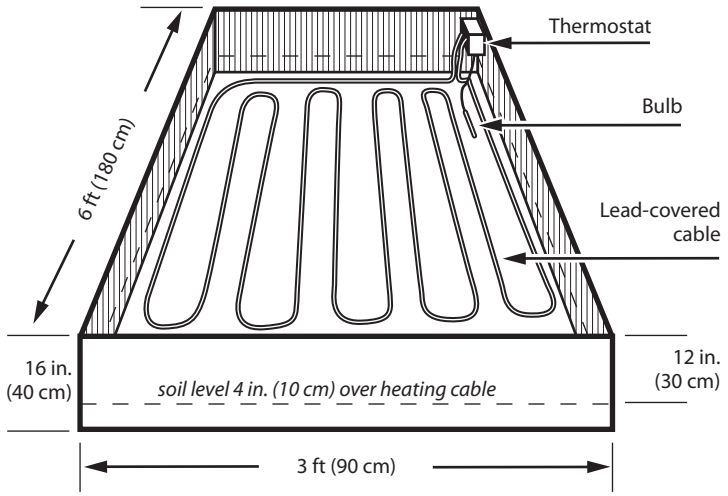
Diagram of an electric hotbed showing the placement of the heating cable, thermostat, and heat-sensitive bulb, which is used to measure soil temperature. Be sure to cover the heating cable with 3 to 4 inches (7.5 to 10 cm) of soil.