Page 433 in *California Master Gardener Handbook*. Paul M. Vossen, 2002. Pittenger, editor. University of California, Division of Agriculture and Natural Resources, Publication 3338. Oakland, CA.
Copyright © 2009 - The Regents of the University of California. All rights reserved.

Figure 16.2
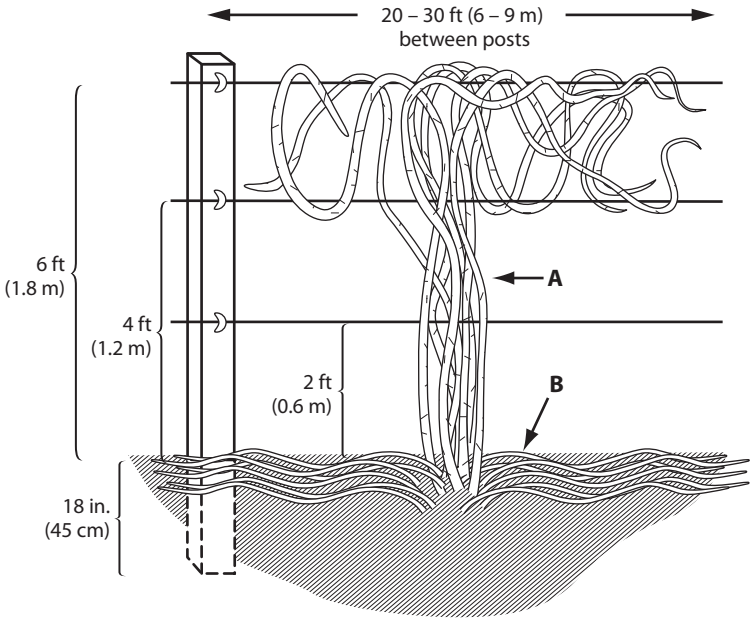
Three-wire trellis for trailing blackberries during the growing season (leaves not shown for clarity). (A) Canes that have just borne fruit and will die. (B) New growth that will bear fruit the following year. *Source:* After Strik 1993, p. 5.