Irrigation Basics and Breakthroughs

Larry Schwankl

Irrigation Specialist

UC Cooperative Extension

559-646-6569 **schwankl@uckac.edu**

Presentation at: http://schwankl.uckac.edu

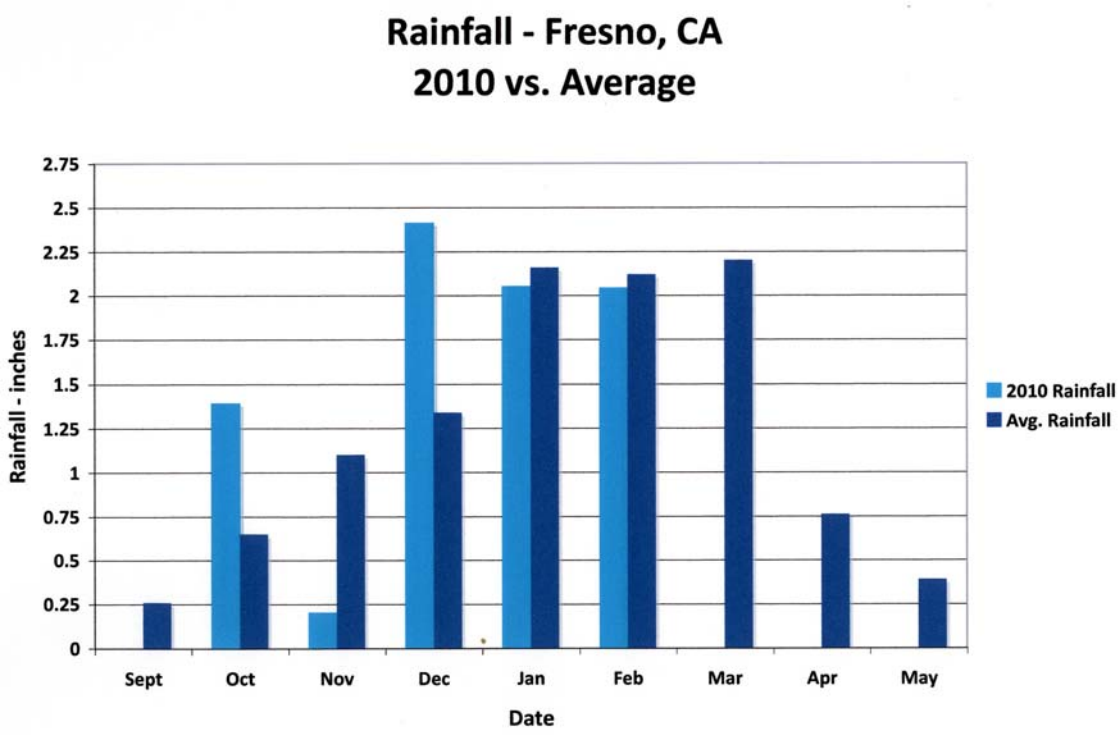

We don’t have to worry anymore, right?

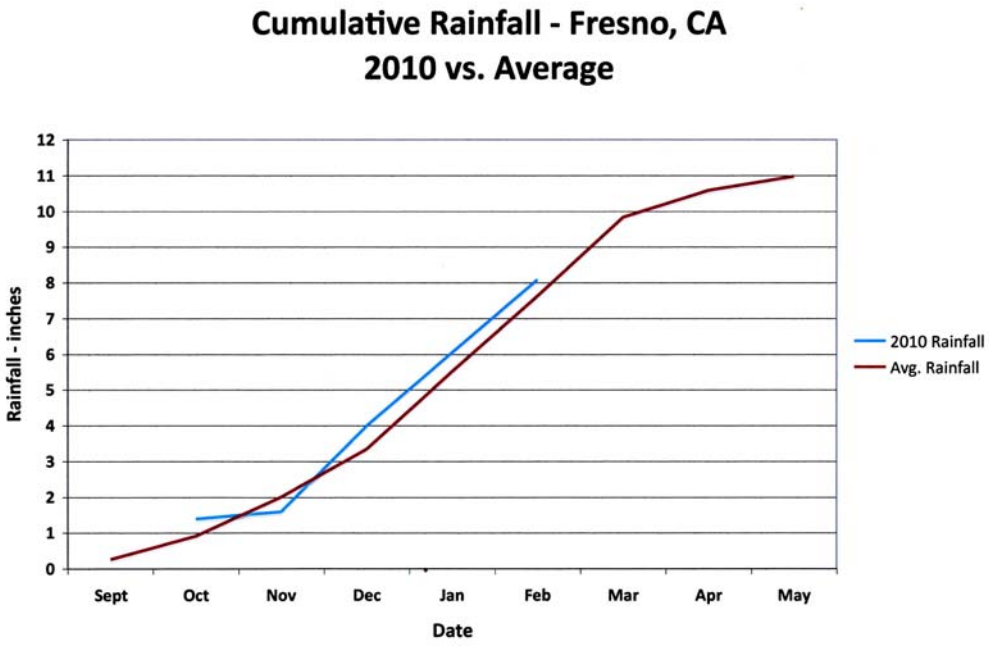

CURRENT RESERVOIR CONDITIONS

February 1

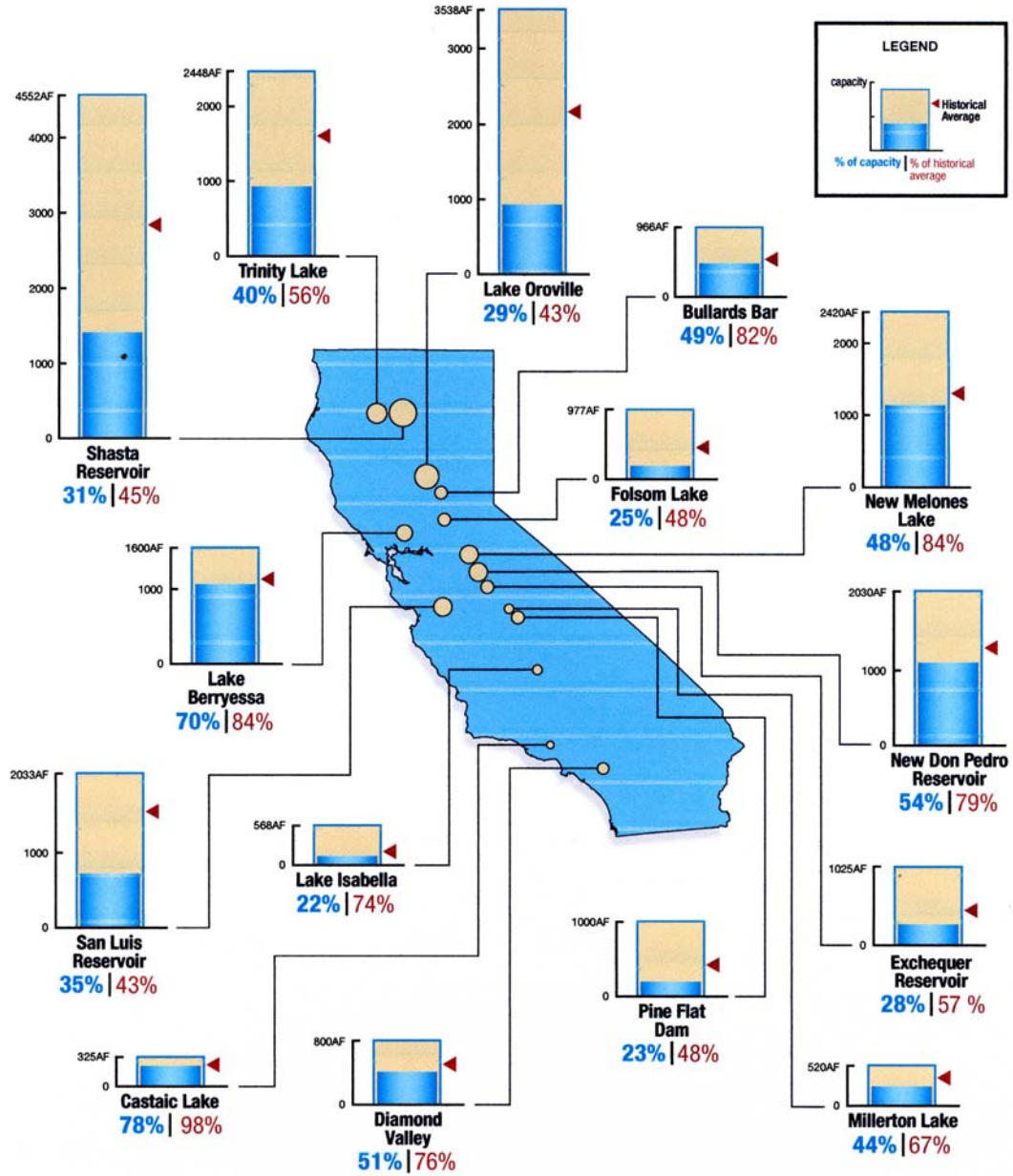

Snowpack = 117% of average

What can you do in your landscape to save water?

1. **Irrigate the landscape you have as efficiently as you can.**
   - When you start paying attention, you will do better.

What can you do in your landscape to save water?

1. **Irrigate the landscape you have as efficiently as you can.**
   - When you start paying attention, you will do better.
2. Change your landscape - change plant selection & irrigation system to be more water efficient.

Look for “Targets of Opportunity” to Save Water

1. Sprinklers are often good candidates - a lot of water can be lost to runoff down the gutter.

Look for "Targets of Opportunity" to Save Water

1. **Sprinklers are often good candidates - a lot of water can be lost to runoff.**
2. **Turf & deciduous trees are often big water users.**
   - Turf is large user and is sprinkler irrigated.

Look for "Targets of Opportunity" to Save Water

1. **Sprinklers are often good candidates - a lot of water can be lost to runoff.**
2. **Turf & deciduous trees are often big water users.**
   - Turf is large user and is sprinkler irrigated.
     - Water use can be reduced by being more efficient or reducing turf area.

Look for "Targets of Opportunity" to Save Water

1. **Sprinklers are often good candidates - a lot of water can be lost to runoff.**
2. **Turf & deciduous trees are often big water users.**
   - Turf is large user and is sprinkler irrigated.
   - Trees: Consider fruit trees. Smaller trees use less water.

Turfgrass Irrigation - Saving water:

- **Don’t irrigate so entire lawn is green & lush.**
  - Back off on irrigation until see stressed areas in lawn. Irrigate those periodically by hand.

Turfgrass Irrigation - Saving water:

- **Don’t irrigate so entire lawn is green & lush.**
- **Reduce the water lost to runoff.**
  - Time when runoff starts = station run time.
  - If need more irrigation time, cycle on and off
    - Wait at least 1 hour between irrigations.

Turfgrass Irrigation - Saving water:

- **Don’t irrigate so entire lawn is green & lush.**
- **Reduce the water lost to runoff.**
  - Time when runoff starts = station run time.
  - If need more irrigation time, cycle on and off
    - Wait at least 1 hour between irrigations.
  - Adjust the sprinklers so don’t water sidewalks & driveways.

Turfgrass Irrigation - Saving water:

- Don’t irrigate so entire lawn is green & lush.
- Reduce the water lost to runoff.
- **Irrigate in the early morning.**

Reduce evaporation

Turfgrass Irrigation - Saving water:

- Don’t irrigate so entire lawn is green & lush.
- Reduce the water lost to runoff.
- Irrigate in the early morning.

Reduce evaporation

Visually check for problems

Turfgrass Irrigation - Saving water:

- **Don’t irrigate so entire lawn is green & lush.**
- **Reduce the water lost to runoff.**
- **Irrigate in the early morning.**
- Adjust your controller for changing water needs.

Smart Controllers

- Biggest thing happening in landscape irrigation now.

Smart Controllers

- An irrigation controller which *automatically* adjusts the irrigation run times based on *environmental conditions*.

Smart Controllers

- An irrigation controller which *automatically* adjusts the irrigation run times based on *environmental conditions*.

What environmental conditions?

Smart Controllers

- An irrigation controller which *automatically* adjusts the irrigation run times based on *environmental conditions*.

  What environmental conditions?

  - Soil moisture conditions
  - Weather conditions

Smart Controller with Soil Moisture Feedback?

Types of **soil moisture feedback**:

1. You set the irrigation schedule & soil moisture feedback cancels the programmed irrigation if “irrigation is not needed”.
2. Soil moisture feedback controls the irrigations. Turns it on when needed.

Smart Controller with Soil Moisture Feedback?

Weakness: Where do you place the soil moisture sensor?

Is it representative of the whole landscape?

ET = Evapotranspiration = Plant Water Use

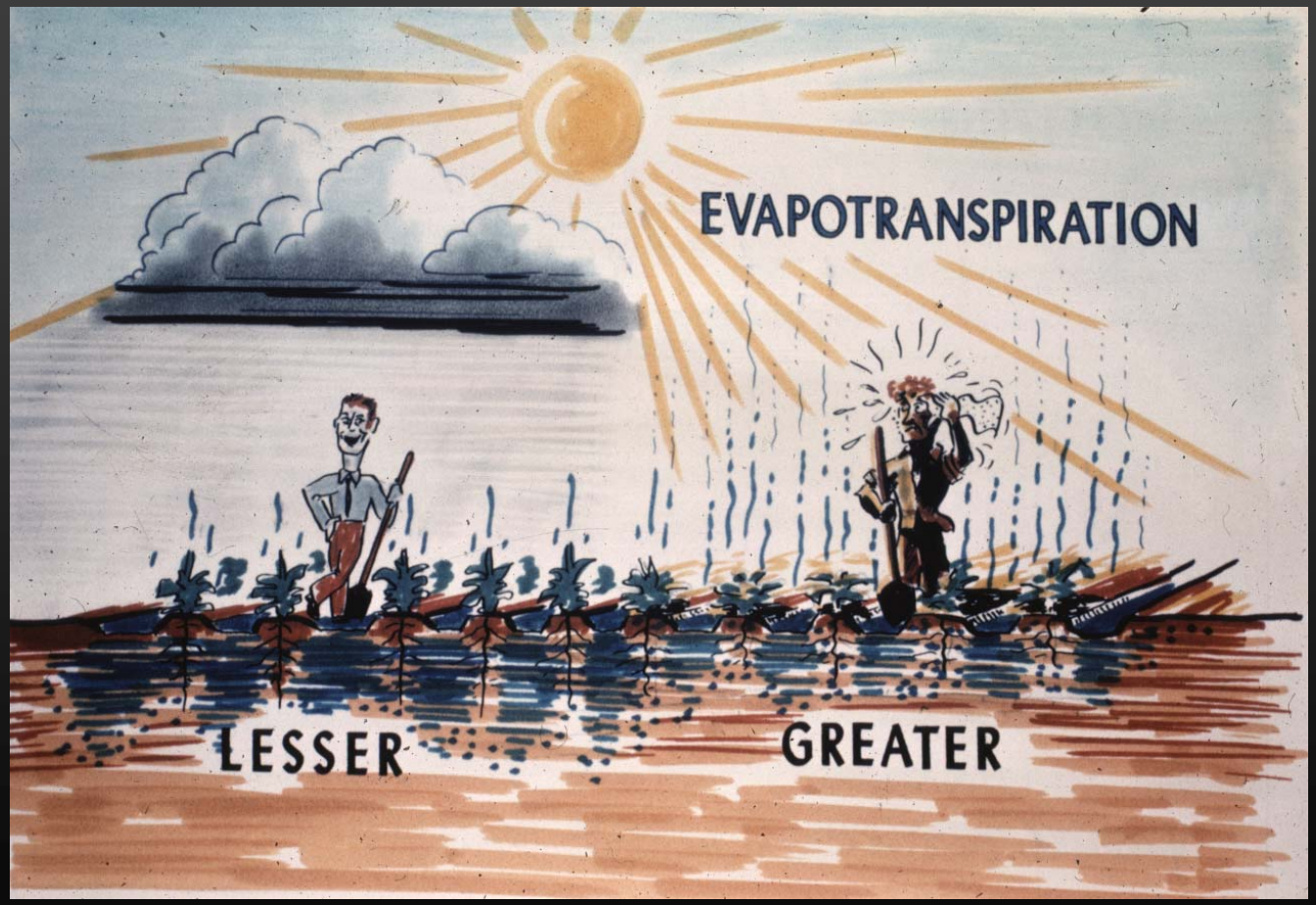

Smart Controller with Weather Conditions Feedback?

1. Historical ET info. in controller so that irrigation runtimes change as ET changes. "Average" year.

Smart Controller with Weather Conditions Feedback?

1. Historical ET info. in controller so that irrigation runtimes change as ET changes. "Average" year.
2. Historical ET with adjustment from an on-site weather station.

Smart Controller with Weather Conditions Feedback?

1. Historical ET info. in controller so that irrigation runtimes change as ET changes. "Average" year.
2. Historical ET with adjustment from an on-site weather station.
3. Controller uses on-site weather station to determine irrigation run times.

Smart Controller with Weather Conditions Feedback?

1. Historical ET info. in controller so that irrigation runtimes change as ET changes. "Average" year.
2. Historical ET with adjustment from an on-site weather station.
3. Controller uses on-site weather station to determine irrigation run times.
4. Controller hooked into a wireless system which "beams" info. to controller.
   - Some hooked in so you can input / access data via the internet.
   - Initial costs + annual subscription

Smart Controller with Weather Conditions Feedback?

Weakness: Is the weather info. the decisions are based on representative of what your landscape is experiencing?

- Weather station citing.
- Measurement instrument accuracy / reliability.
- **Conversion of weather info. to landscape plant ET.**

Smart Controller: Use them?

- For turf, they should be beneficial.
- For mixed landscapes, difficult to use.
- Cost an issue.

Turfgrass Irrigation Management:

- How long to run the sprinklers?
  - Depends on:
    1. Time of year.
    2. Sprinkler application rate.

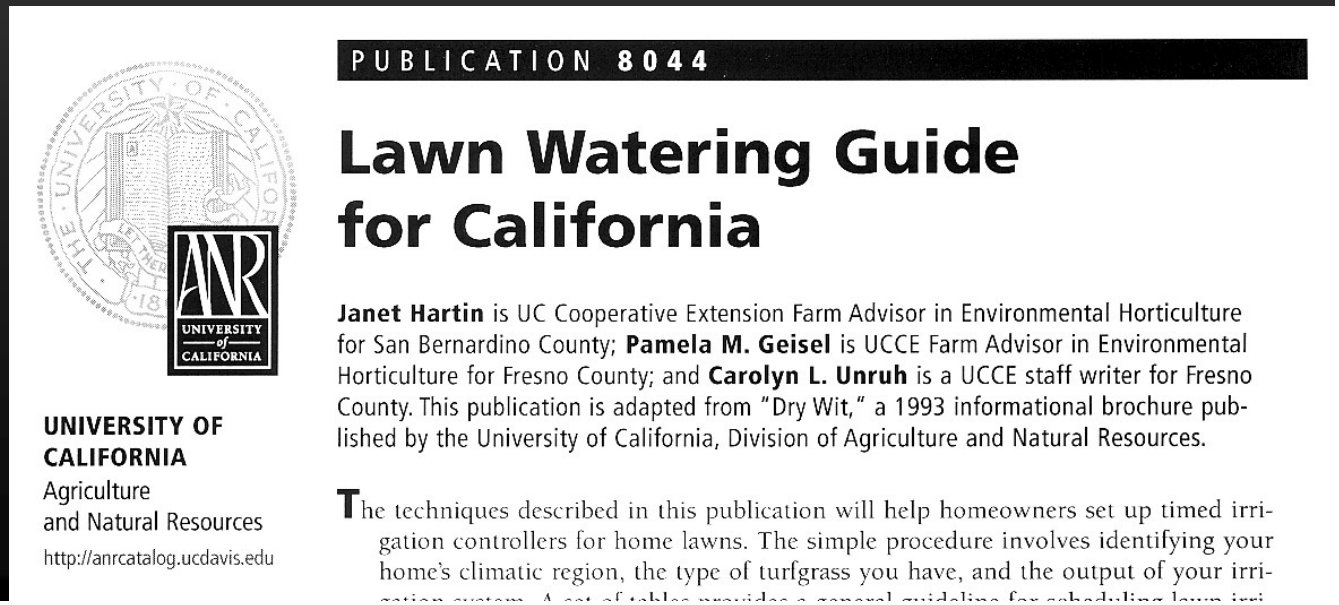

UNIVERSITY OF CALIFORNIA
Agriculture
and Natural Resources
http://anrcatalog.ucdavis.edu

PUBLICATION **8044**

Lawn Watering Guide for California

Janet Hartin is UC Cooperative Extension Farm Advisor in Environmental Horticulture for San Bernardino County; **Pamela M. Geisel** is UCCE Farm Advisor in Environmental Horticulture for Fresno County; and **Carolyn L. Unruh** is a UCCE staff writer for Fresno County. This publication is adapted from "Dry Wit," a 1993 informational brochure published by the University of California, Division of Agriculture and Natural Resources.

The techniques described in this publication will help homeowners set up timed irrigation controllers for home lawns. The simple procedure involves identifying your home's climatic region, the type of turfgrass you have, and the output of your irri-

Turfgrass Irrigation Management:

- How long to run the sprinklers?

Region 5: San Joaquiin Valley

	Warm-Season Turfgrasses				Cool-Season Turfgrasses			
	Minutes per week to irrigate if your hourly sprinkler output is:				Minutes per week to irrigate if your hourly sprinkler output is:			
	0.5 in	1.0 in	1.5 in	2.0 in	0.5 in	1.0 in	1.5 in	2.0 in
JAN	19	09	06	05	25	13	08	06
FEB	38	19	13	09	50	25	17	13
MAR	69	35	23	17	92	46	31	23
APR	101	50	34	25	134	67	45	34
MAY	132	66	44	33	176	88	59	44
JUN	164	82	55	41	218	109	73	55
JUL	170	85	57	43	227	113	76	57
AUG	145	72	48	36	193	97	64	48
SEP	113	57	38	28	151	76	50	38
OCT	69	35	23	17	92	46	31	23
NOV	32	16	11	08	42	21	14	11
DEC	13	06	04	03	17	08	06	04

Turfgrass Irrigation Management:

- Sprinkler application rate:
  - Set out some “catch cans” to determine your application rate.

5-foot spacing

15 min run time

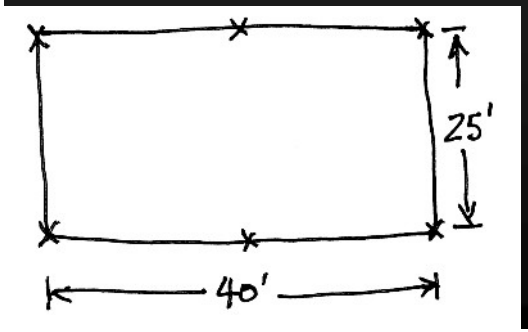

Turfgrass Irrigation Management:

- Sprinkler application rate:
  - Set out some “catch cans” to determine your application rate.

Measure the amount of water collected

Turfgrass Irrigation Management:

Catch can test

mm collected in 15 minutes

15 min x **4** = 1 hr

24.5 mm = 1 inch

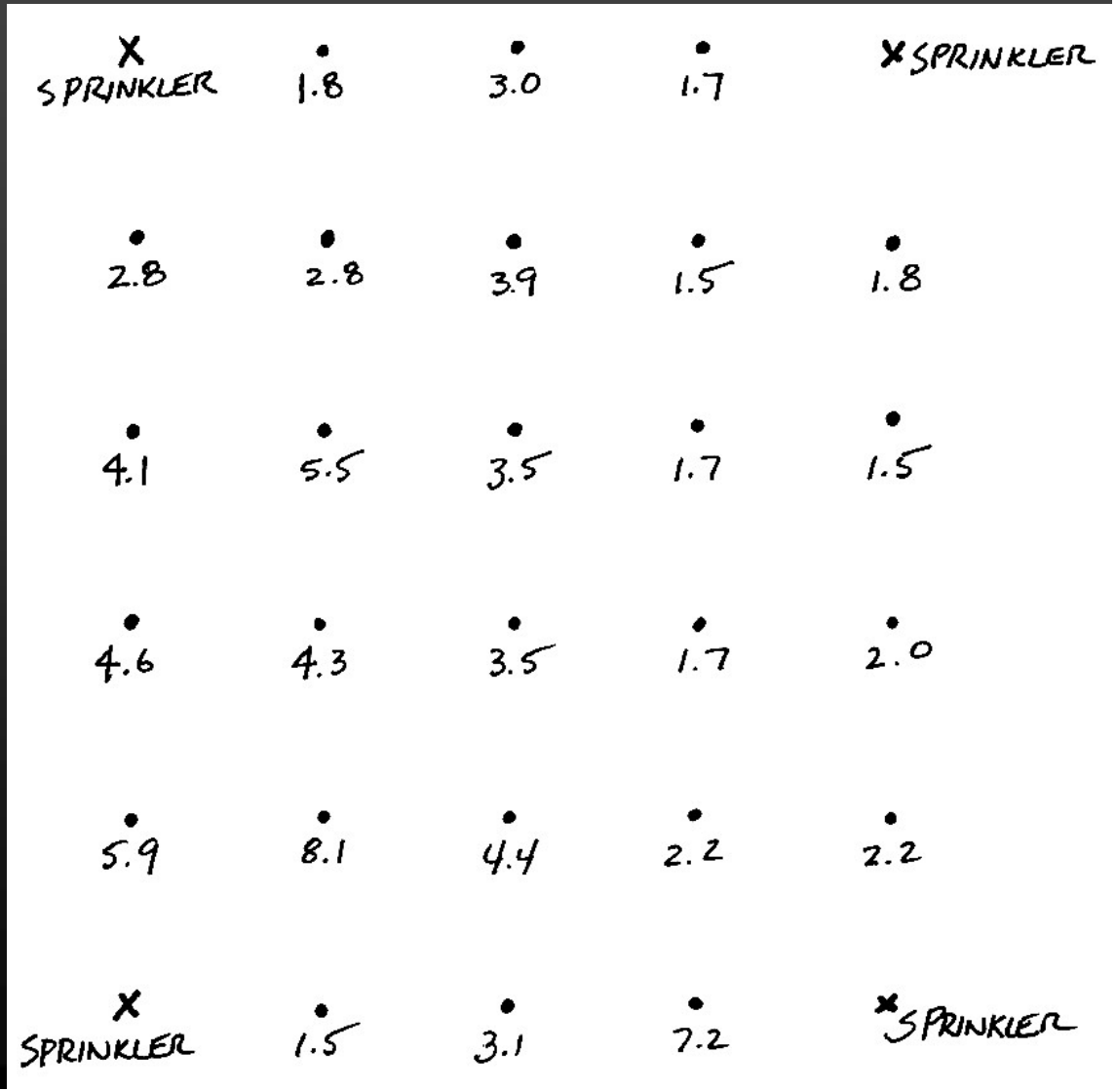

Turfgrass Irrigation Management:

Catch can test

Inches per hour

Average = 0.52 in/hr

X SPRINKLER	0.29	0.47	0.26	X SPRINKLER
0.44	0.44	0.61	0.23	0.29
0.64	0.87	0.55	0.26	0.23
0.73	0.67	0.55	0.26	0.32
0.93	1.28	0.70	0.35	0.35
X SPRINKLER	0.23	0.49	1.14	X SPRINKLER

Turfgrass Irrigation Management:

- Sprinkler application = 0.52 in/hr

Region 5: San Joaquiin Valley

	Warm-Season Turfgrasses				Cool-Season Turfgrasses			
	Minutes per week to irrigate if your hourly sprinkler output is:				Minutes per week to irrigate if your hourly sprinkler output is:			
	0.5 in	1.0 in	1.5 in	2.0 in	0.5 in	1.0 in	1.5 in	2.0 in
JAN	19	09	06	05	25	13	08	06
FEB	38	19	13	09	50	25	17	13
MAR	69	35	23	17	92	46	31	23
APR	101	50	34	25	134	67	45	34
MAY	132	66	44	33	176	88	59	44
JUN	164	82	55	41	218	109	73	55
JUL	170	85	57	43	227	113	76	57
AUG	145	72	48	36	193	97	64	48
SEP	113	57	38	28	151	76	50	38
OCT	69	35	23	17	92	46	31	23
NOV	32	16	11	08	42	21	14	11
DEC	13	06	04	03	17	08	06	04

Turfgrass Irrigation - Saving water:

- Don’t irrigate so entire lawn is green & lush.
- Reduce the water lost to runoff.
- Irrigate in the early morning.
- Adjust your controller for changing water needs.
- Try to avoid daily irrigations.
  - Odd/even watering requirements.

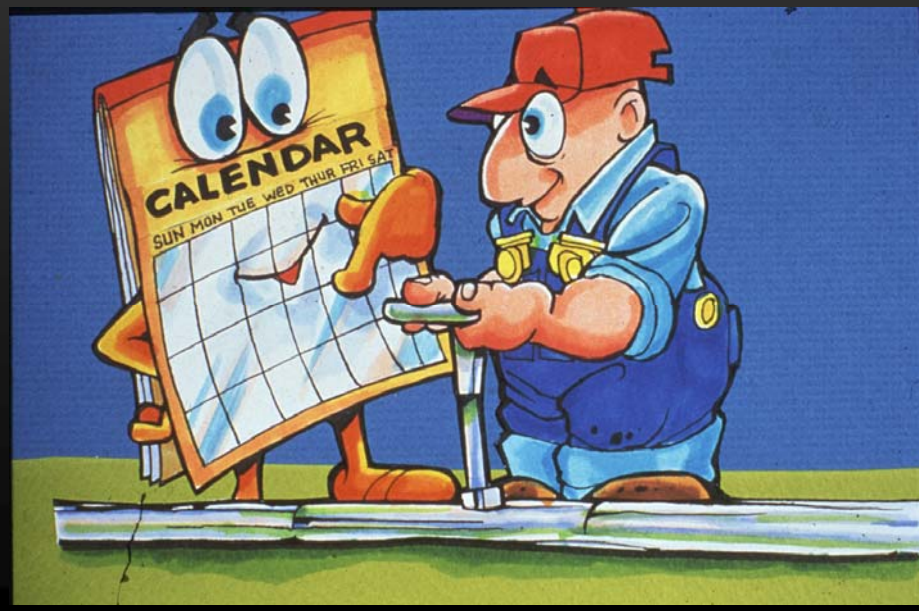

Turfgrass Irrigation - Saving water:

- Don’t irrigate so entire lawn is green & lush.
- Reduce the water lost to runoff.
- Irrigate in the early morning.
- Adjust your controller for changing water needs.
- Try to avoid daily irrigations.
- Make sure sprinklers pop up above the grass.

Drip Irrigation:

Excellent for irrigating individual plants, ranging from small to large.

Doesn't work well for turf.

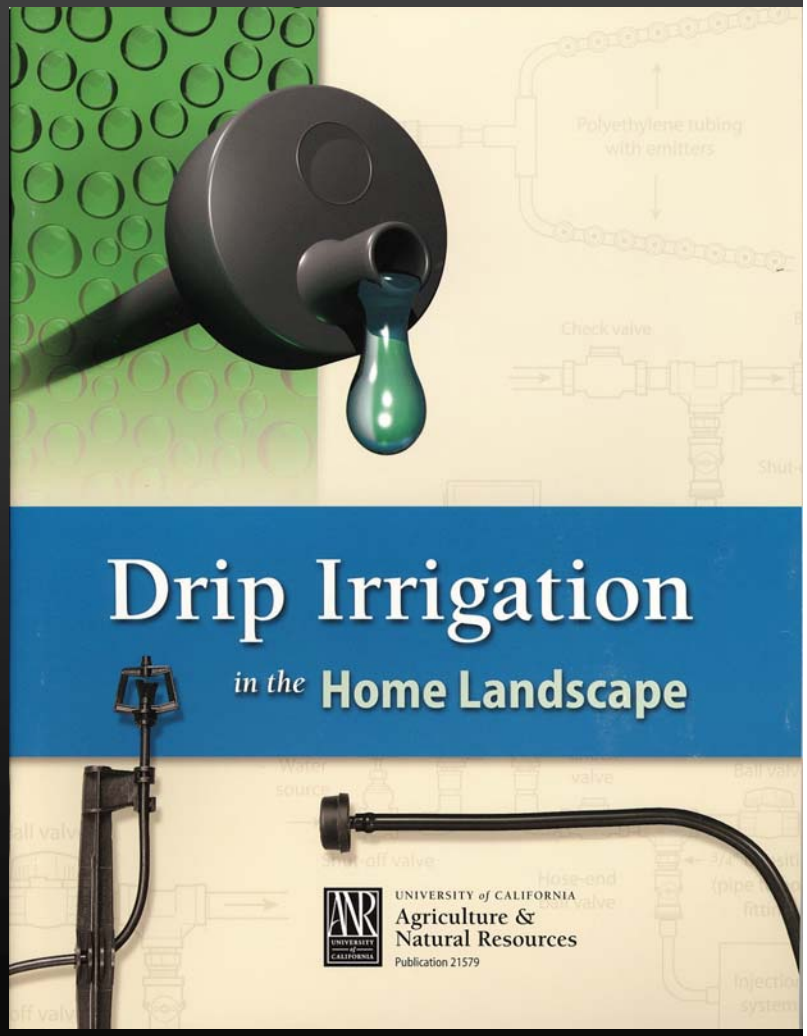

Drip Irrigation:

- Break the watering areas into “hydrozones”.
  - Areas / plants of similar watering needs.

Drip Irrigation:

- Break the watering areas into “hydrozones”.
  - Areas / plants of similar watering needs.
- Plan ahead!!!
  - More zones are better (valves & controller).
  - You’ll always want more zones / stations in the future.
  - New systems - don’t skimp on underground pipe - harder to add later.

Drip Irrigation:

- Drip emitters for smaller, stand-alone plants.
  - 0.5 gph, 1 gph, 2 gph emitters available.

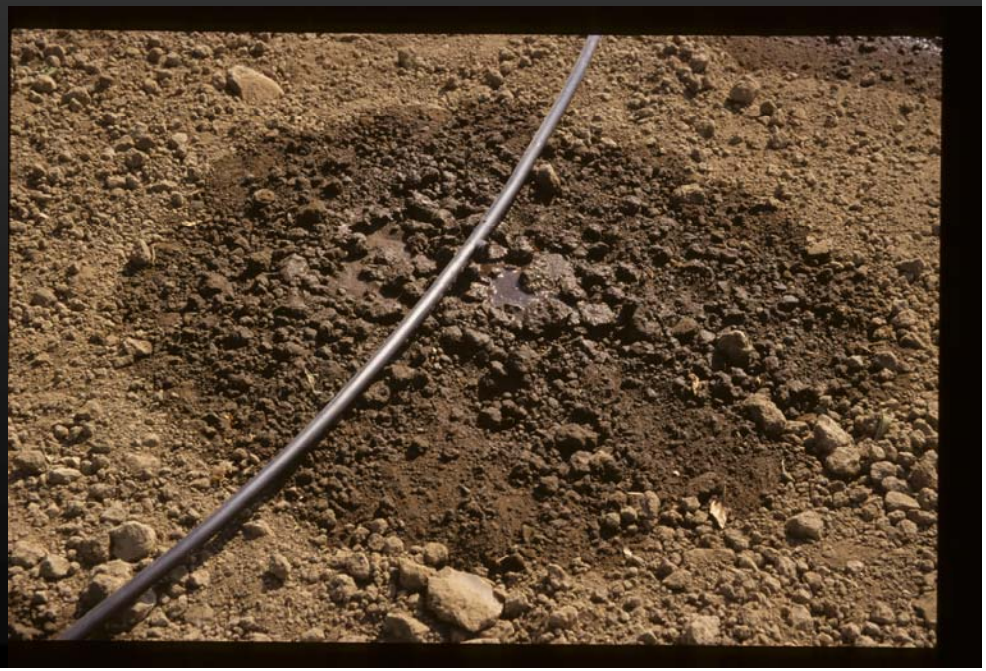

Drip Irrigation:

- Drip emitters for smaller, stand-alone plants.
- Sprayers / microsprinklers for larger plants (e.g. trees).

Drip Irrigation:

- Drip emitters for smaller, stand-alone plants.
- Sprayers / microsprinklers for larger plants (e.g. large trees).
- Narrow plantings, vegetable gardens.

Misc. Drip Irrigation Hints:

- Always use a filter.

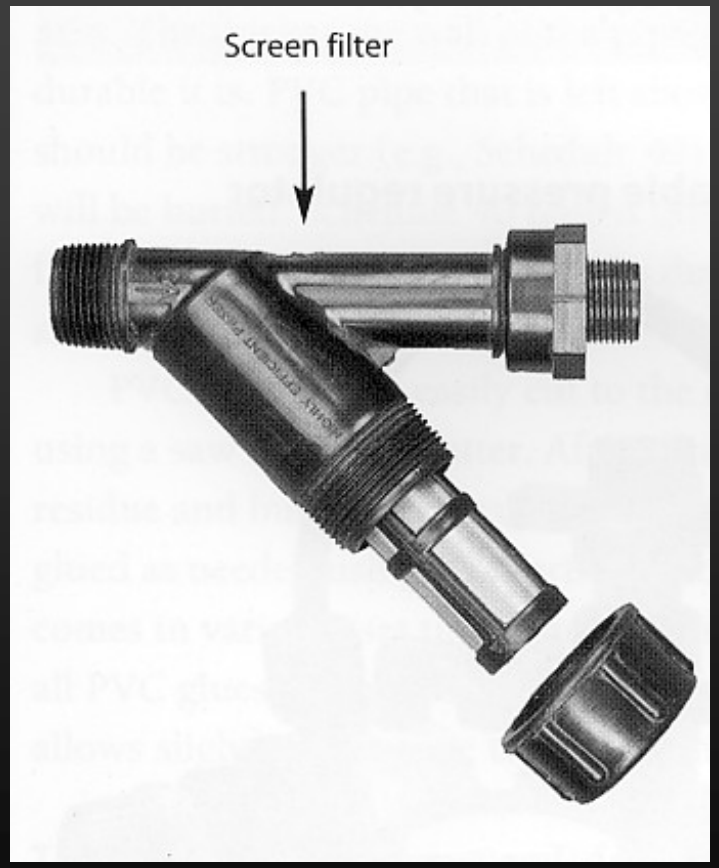

Misc. Drip Irrigation Hints:

- Always use a filter.

  And CLEAN IT when it's dirty.

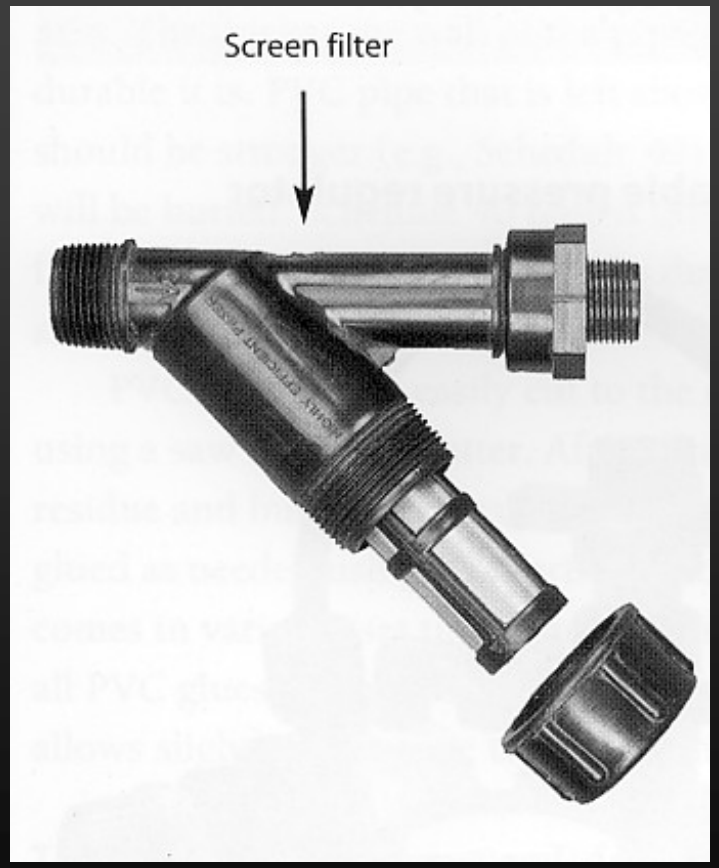

Misc. Drip Irrigation Hints:

- Always use a filter.
- Drip emitters shouldn't be buried.
  - OK to put them under a mulch

Misc. Drip Irrigation Hints:

- Always use a filter.
- Drip emitters shouldn't be buried.
- Put drip line (without emitters) below ground when you can.

Misc. Drip Irrigation Hints:

- Always use a filter.
- Drip emitters shouldn't be buried.
- Put drip line (without emitters) below ground when you can.
- You can put quite a few (e.g. 200) drip emitters on a drip line.

Misc. Drip Irrigation Hints:

- Always use a filter.
- Drip tubing / fittings come in different sizes.
- Use pressure reducers to lower the pressure.
- Drip emitters shouldn't be buried.
- Put drip line (without emitters) below ground when you can.
- You can put quite a few (e.g. 200) drip emitters on a drip line.
- Slow application rate with drip irrigation = may require long station run times.

Misc. Drip Irrigation Hints:

- Always use a filter.
- Drip tubing / fittings come in different sizes.
- Use pressure reducers to lower the pressure.
- Drip emitters shouldn't be buried.
- Put drip line (without emitters) below ground when you can.
- You can put quite a few (e.g. 200) drip emitters on a drip line.
- Slow application rate with drip irrigation = may require long station run times.
- Daily irrigations are not preferred (usually) - water deep
  - Check the soil if in doubt

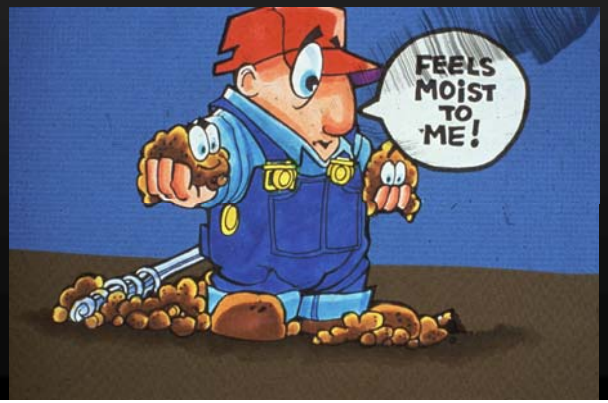


XTRUDED A
ELLUL

Misc. Drip Irrigation Hints:

- Always use a filter.
- Drip tubing / fittings come in different sizes.
- Use pressure reducers to lower the pressure.
- Drip emitters shouldn't be buried.
- Put drip line (without emitters) below ground when you can.
- You can put quite a few (e.g. 200) drip emitters on a drip line.
- Slow application rate with drip irrigation = may require long station run times.
- Daily irrigations are not preferred (usually) - water deep
- Plant symptoms for under-watering & over-watering often look similar.
  - Check the soil

Changing Your Landscape To Reduce Water Use:

- Move away from turf

Changing Your Landscape To Reduce Water Use:

- Move away from turf
- Replace turf with plantings which can be drip irrigated.
  - Vegetables - low water users due to short season

Changing Your Landscape To Reduce Water Use:

- Move away from turf
- Replace turf with plantings which can be drip irrigated.
  - Vegetables - low water users due to short season
  - Native / low water use plants

Changing Your Landscape To Reduce Water Use:

- Move away from turf
- Replace turf with plantings which can be drip irrigated.
  - Vegetables - low water users due to short season
  - Native / low water use plants
  - Water only the plants, not the areas between

Changing Your Landscape To Reduce Water Use:

- Move away from turf
- Replace turf with plantings which can be drip irrigated.
  - Vegetables - low water users due to short season
  - Native / low water use plants
  - Water only the plants, not the areas between
  - Mulch to control weeds and reduce water losses

Changing Your Landscape To Reduce Water Use:

- Move away from turf
- Replace turf with plantings which can be drip irrigated.
- If going to plant trees:
  - Consider low water use varieties

Changing Your Landscape To Reduce Water Use:

- Move away from turf
- Replace turf with plantings which can be drip irrigated.
- If going to plant trees:
  - Consider low water use varieties
  - Consider smaller fruit trees

Changing Your Landscape To Reduce Water Use:

- Move away from turf
- Replace turf with plantings which can be drip irrigated.
- If going to plant trees:
  - Consider low water use varieties
  - Consider smaller fruit trees
- Issues to consider:
  - Can be higher maintenance than turf

Changing Your Landscape To Reduce Water Use:

- Move away from turf
- Replace turf with plantings which can be drip irrigated.
- If going to plant trees:
  - Consider low water use varieties
  - Consider smaller fruit trees
- Issues to consider:
  - Can be higher maintenance than turf
  - Cost of changing landscape

Changing Your Landscape To Reduce Water Use:

- Move away from turf
- Replace turf with plantings which can be drip irrigated.
- If going to plant trees:
  - Consider low water use varieties
  - Consider smaller fruit trees
- Issues to consider:
  - Can be higher maintenance than turf
  - Cost of changing landscape
  - Is the new landscape as functional <u>for you</u> as turf?

Questions?

Larry Schwankl

559-646-6569

e-mail: schwankl@uckac.edu

Presentation available at: http://schwankl.uckac.edu